Available online at www.sciencedirect.com
ScienceDirect
Transportation Research Part B 41 (2007) 394–409
TRANSPORTATION RESEARCH PART B
www.elsevier.com/locate/trb

Hub-and-spoke network alliances and mergers: Price-location competition in the airline industry

Nicole Adler [a,*], Karen Smilowitz [b]

[a] School of Business Administration, Hebrew University of Jerusalem, Israel
[b] Department of Industrial Engineering and Management Sciences, Northwestern University, United States

Received 31 May 2005; received in revised form 9 January 2006; accepted 14 June 2006

Abstract

This paper presents a framework to analyze global alliances and mergers in the airline industry under competition. The framework can help airlines identify partners and network structures, and help governments predict changes in social welfare before accepting or rejecting proposed mergers or alliances. The research combines profit-maximizing objectives to cost-based network design formulations within a game theoretic framework. The resulting analysis enables merging airlines to choose appropriate international hubs for their integrated network based on their own and their competitors' costs and revenues in the form of best response functions. The results of an illustrative example suggest that some mergers may be more successful than others and optimal international gateway choices change according to the number of competitors remaining in the market. Furthermore, although the pressure on airlines would suggest a strong preference for mergers or alliances, perhaps surprisingly, the solution outcomes whereby all airlines merge or ally are not equilibria in the overall game.
© 2006 Elsevier Ltd. All rights reserved.

Keywords: Airline hub-spoke networks; Game theory; Location; Competition

1. Introduction

As consolidation continues in the airline industry, this research analyzes the survivability of hub-and-spoke (HS) network mergers from the point-of-view of the airlines and the effects on travelers and airports. This research provides a framework to study competitive equilibria analytically on a global basis, drawing on the idea that four or five global HS airlines are likely to serve the industry, with numerous specialty airlines within continents (Oum et al., 2000). Industry consolidation may be accelerated by expected relaxations in international regulations on the formation of alliances and mergers (Fan et al., 2001). As airlines push for wider deregulation (Chang and Williams, 2002), it is critical to consider the impact of any changes on the expected responses from the airlines.

* Corresponding author.
E-mail addresses: msnic@huji.ac.il (N. Adler), ksmilowitz@northwestern.edu (K. Smilowitz).

0191-2615/$ - see front matter © 2006 Elsevier Ltd. All rights reserved.
doi:10.1016/j.trb.2006.06.005

The modeling framework presented in this paper allows airlines to choose network structure and strategic alliances together, recognizing the important interdependence between the two decisions. The research analyzes alliances and mergers specifically under competition, with minimal to no regulation, and identifies preferable alliance partners and network designs. The modeling approach utilizes models from network design within a game theoretic framework, thus enabling airlines to choose appropriate international hubs based on their own and their competitors' cost and revenue analyses. The modeling approaches applied here include the *p*-hub median formulation (O'Kelly, 1987) and discrete choice market share models (Ben-Akiva and Lerman, 1985). Unlike the more general economic-based research, such as Brueckner and Spiller (1991) and Park et al. (2001), this framework enables airlines and regulatory authorities to analyze specific, potential mergers and alliances and their effect both on air transportation and passengers. The same framework can be applied to other fields such as maritime shipping lines, telecommunications, computer networks and any other industry whereby HS networks are essential to the production plan. As this is a first step in developing such a framework, we present a stylized version of the problem in which some complexities have been removed. More in-depth analysis with additional real world complications is certainly possible, given sufficient demand data and more detailed analysis of the market share model variables and parameters.

Campbell et al. (2002) argue that the effect of pricing and competition in hub and spoke network design has received insufficient attention in the literature. Lederer (1993) develops sufficient conditions for the existence of equilibrium network designs using non-cooperative game theory. Dobson and Lederer (1993) develop a mathematical program to obtain optimal schedules and airfares for airlines operating HS networks under competition. Multiple Nash sub-game perfect equilibria are found using a three-stage heuristic. Lederer and Nambimadom (1998) analyze network and schedule choice by a profit maximizing airline, using four network types, and find that it is optimal for airlines to design networks and schedules to minimize the sum of airline and passenger costs. Based on sensitivity analyses it is shown that for sufficiently large distances and intermediate demand levels, HS networks are preferable, otherwise direct connections can be supported. Marianov et al. (1999) discuss the relocation of hubs in a competitive environment given changes in the origin-destination demand matrix over time. Demand, in terms of flow, is captured through a minimum cost breakdown in order to avoid the use of prices. A Tabu Search heuristic is developed to solve the maximal flow optimization model. Adler (2001) evaluates airline profits based on a micro-economic theory of behavior under deregulation and its connection to hub-and-spoke networks. Through a two-stage Nash best-response game, equilibria in the air-transportation industry are identified. The game is applied to an illustrative example, where profitable hubs are clearly recognizable and monopolistic and duopolistic equilibria are found, the latter requiring sufficient demand.

Bhaumik (2002) and Adler (2005) analyze real world industry conditions. Bhaumik (2002) uses non-cooperative game theory to analyze domestic air travel in India based on a non-zero sum game that searches for a focal point amongst Nash equilibria. Bhaumik's paper studies how a regulator could ensure a reasonable equilibrium outcome by setting airfares, license fees or essential air service requirements. Adler (2005) develops a model framework to provide information on the most adaptable and profitable hub-spoke networks available under competition and applied it to Western Europe. Under a three-airline analysis, a London Heathrow – Zurich hub based airline was the only remaining player. Under increased demand, two players remained in the game, either London/Zurich and Amsterdam/Madrid or the former player alongside Frankfurt/Barcelona, but which outcome was more likely could not be identified at the time.

This paper first introduces network design in a non-competitive environment in Section 2. Section 3 develops a game theoretic framework to compute equilibria for mergers and alliances under competition, adapting the non-competitive network design model to one of profit maximization, given the best responses of competitors in the field. The profit maximizing, *p*-hub median model is applied in Section 4 to analyze a small illustration of potential strategic mergers and alliances. Section 5 summarizes the model formulation and its results and suggests future research directions.

2. Network design in a non-competitive environment

Economic analyses of HS networks have evaluated the cost, marketing and competitive advantages associated with the hubbing phenomenon, see for example, Caves et al. (1984), Morrison and Winston (1986),

McShan and Windle (1989), Brueckner and Spiller (1994), Nero (1999), Barla and Constantatos (2000), Pels et al. (2000), Adler and Berechman (2001) and Brueckner and Zhang (2001). HS networks can improve economic returns, enabling airlines to better exploit network economies. In addition, the carriers can increase service frequency to gain market share and deter entry (Button, 2002).

Section 2.1 introduces the global hub-and-spoke networks to be analyzed within the framework of this research. Section 2.2 presents the *p*-hub median model used to develop HS networks, which is adapted in Section 2.3 to consider choices among international gateways. Section 2.4 presents an example, which identifies the problems of analyzing competition from a pure supply perspective.

2.1. Network description

Fig. 1 presents an example of the stylized, global, HS networks investigated in this research. The nodes of the network include spokes and hubs, which are separated into international gateways and regional hubs. International gateways connect continents, while regional hubs connect local airports (the "spokes") within a continent. In this paper, it is assumed that one international gateway will exist on each continent for each airline. International gateways are connected to all regional hubs within the same continent by definition as well as to spokes, where relevant. All hubs on a specific continent are interconnected, as assumed in previous research, and all international gateways are interconnected across continents. As a result, the maximum number of legs for travel within a continent on a specific airline is three, irrespective of the number of hubs chosen; e.g., to travel from node (10) to node (12) would involve one leg from (10) to G_3, a second leg from G_3 to R_3 and finally a third leg from R_3 to (12). Inter-continental journeys are limited to five legs. For example, if both the origin and destination nodes are attached to regional hubs, traveling across continents will necessarily involve a five-leg journey, e.g. a trip from node (2) to node (8) will involve visits to hubs R_1, G_1, G_2 and R_2.

We analyze mergers and alliances between airlines on multiple continents, thus considering complementary rather than parallel alliances. However, both airlines and regulatory authorities can utilize the proposed modeling framework to investigate parallel alliances. Specifically, this research determines the location of international gateways in a post-merger or alliance combined network.

2.2. The p-hub median model

We adapt the standard *p*-hub median problem from O'Kelly (1987) to analyze HS networks. The *p*-hub median problem determines the optimal location of hubs within a network and the allocation of demand

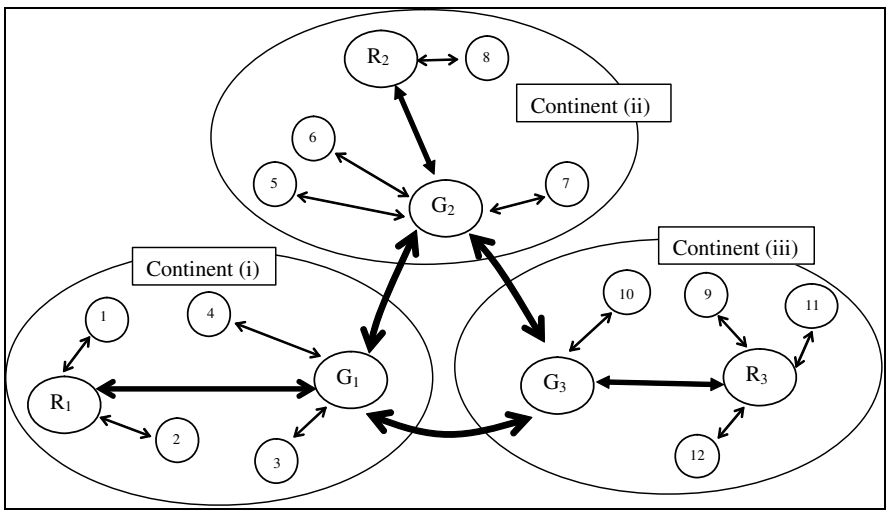

Fig. 1. Global hub-and-spoke network configuration.

nodes to hubs such that the demand weighted cost traveled in a network is minimized. We present the data, decision variables and model for computing hub location in a network.

Data

N	set of all nodes in the network
H	set of all potential hub locations in the network, $H \subseteq N$
h_{ij}	origin-destination demand from node $i \in N$ to node $j \in N$ (passengers per time period)
c_{ij}	cost per passenger to travel from node $i \in N$ to node $j \in N$
α	cost reduction factor on links between hubs
P	number of hubs to locate

Decision variables

X_j	1 if hub is located at node $j \in H$; 0 otherwise
Y_{ij}	1 if node $i \in N$ is connected to hub $j \in H$; 0 otherwise

$$\text{Min} \quad \sum_{i\in N}\sum_{k\in H} c_{ik}Y_{ik}\left(\sum_{j\in N} h_{ij}\right) + \sum_{k\in H}\sum_{i\in N} c_{ki}Y_{ik}\left(\sum_{j\in N} h_{ji}\right) + \alpha \sum_{i\in N}\sum_{j\in N}\sum_{k\in H}\sum_{m\in H} h_{ij}c_{km}Y_{ik}Y_{jm} \tag{1a}$$

subject to

$$\sum_{j\in H} Y_{ij} = 1 \quad \forall i \in N \tag{1b}$$

$$\sum_{j\in H} X_j = P \tag{1c}$$

$$Y_{ij} - X_j \leqslant 0 \quad \forall i \in N,\ j \in H \tag{1d}$$

$$X_j = \{0,1\} \quad \forall j \in H \tag{1e}$$

$$Y_{ij} = \{0,1\} \quad \forall i \in N,\ j \in H \tag{1f}$$

The objective function (1a) minimizes the total demand-weighted travel cost: the first two terms compute the cost of flow between spokes and hubs and the last term computes a discounted cost of hub-to-hub flows to account for economies of density. It is assumed that all hubs are completely connected. Constraints (1b) specify that each spoke must be connected to one hub. Constraint (1c) states that there must be exactly P hubs. Constraints (1d) restrict the assignment variables to open hubs. Finally, constraints (1e) and (1f) specify that both the location and allocation variables are binary. Setting constraints (1b) to "greater than or equal to" would allow multiple allocations i.e., spokes connected to more than one hub on the same continent.

Note that the p-hub median problem is quadratic in nature due to the multiplication of decision variables in the objective function, which has proven exacting to solve (Campbell, 1994; Bryan and O'Kelly, 1999). For the purpose of illustration, only small examples are analyzed in this paper where an optimal solution can be found using complete enumeration; however, more sophisticated methods can be used for larger problem instances, as described in Skorin-Kapov and Skorin-Kapov (1994), Ernst and Krishnamoorthy (1998) and Ebery (2001). Heuristic solutions can be found for approximately 200 nodes with a small number of hubs, and exact solutions can be computed for around 80 nodes.

2.3. The p-hub median model for alliances and mergers

We present several modifications to formulation (1) to analyze global mergers and alliances and to capture the location choices available to airlines in the foreseeable future. We consider a set T of continents, each with a set N^t of nodes; $N^t \subseteq N$. To reduce the complexity of the model, we assume that the regional hubs $H^t \subseteq H$ within each continent $t \in T$ are given and airlines choose their international gateways from this subset of regional hubs. Each airline chooses one gateway per continent from the subset of regional hubs. Additionally,

the allocation decisions in the p-hub median problem are fixed; i.e., the allocation variables $\widehat{Y}_{ir}$ of nodes $i \in N$ to hubs $r \in H$ are given. As a result, we can aggregate demand from origins/destinations to the hubs. Let $\hat{h}_r^0$ denote the flow of passengers between hub $r \in H$ and the international gateway: $\hat{h}_r^0 = \sum_{i \in N^t} \sum_{j \in N \setminus N^t} (h_{ij} + h_{ji}) \widehat{Y}_{ir}$. Let $\hat{h}_{rs}^1$ denote the flow of passengers between international gateways $r \in H$ and $s \in H$ (such that $r \neq s$): $\hat{h}_{rs}^1 = \sum_{i \in N^{t(r)}} \sum_{j \in N^{t(s)}} h_{ij}$ where $N^{t(r)}$ denotes the set of nodes on the continent containing gateway r and $N^{t(s)}$ denotes the set of nodes on the continent containing gateway s.

A measure of the attractiveness of the network design to passengers is incorporated in the cost-based model in the form of a penalty for indirect routes. Four-leg trip types are substantially less desirable than two or three leg journeys; hence, we add a penalty β in the objective function to reflect these preferences when choosing a hub type.

The gateway location problem determines the location of international gateways on each continent for a given airline. Let $Z_r = 1$ if hub $r \in H$ is chosen as an international gateway and 0 otherwise

$$\text{Min} \quad \sum_{t \in T} \left[\sum_{s \in H^t} \sum_{r \in H^t : r \neq s} (c_{rs} + \beta) \hat{h}_r^0 Z_s + \alpha \sum_{r \in H^t} \sum_{s \in H \setminus H^t} (c_{rs} + \beta) \hat{h}_{rs}^1 Z_r Z_s \right] \tag{2a}$$

subject to

$$\sum_{r \in H^t} Z_r = 1 \quad \forall t \in T \tag{2b}$$

$$Z_r = \{0, 1\} \quad \forall r \in H \tag{2c}$$

The objective function (2a) minimizes the demand-weighted travel cost (distance and leg count) with a reduction factor of α on flights between international gateways. The parameter β provides a trade-off between travel distance and the supplementary leg function. Constraints (2b) allow one international gateway on each continent. Constraints (2c) specify that all decision variables are binary. Extensions to allow for multiple international gateways on each continent would require a set of allocation variables for hubs to gateways within a continent, which would probably be destination dependent.

2.4. Cost functions

Little attention in the literature has focused on the cost function, c_{ij}. Swan and Adler (2006) found that the great circle distance in kilometers, D_{ij}, and the number of seats on an aircraft, S_{ij}, are the two main factors affecting total aircraft trip costs between origin i and destination j. Two length-based equations are presented (due to the different type of aircraft flown which substantially changes the parameter values) one for short to medium haul markets covering flights of less than 5000 km, Eq. (3a), and one for long haul markets equal to or greater than 5000 km, Eq. (3b).

$$C_{ij}^{short} = (D_{ij} + 722) * (S_{ij} + 104) * \$0.019 \tag{3a}$$

$$C_{ij}^{long} = (D_{ij} + 2200) * (S_{ij} + 211) * \$0.0115 \tag{3b}$$

For simplicity, in our illustration we assume three aircraft sizes, 390 seats for long haul markets, 170 seats for short haul markets, and 270 seats for short-haul trips between hubs. The costs include pilot and crew wages, fuel, capital, maintenance and station charges, on a cost-per-seat basis, irrespective of whether the seat is filled or not, assuming a 70% load factor. The parameters in Eqs. (3) draw on data from the year 2001. Fixed costs are not considered in this model. It is assumed that each airline faces the same cost function. Additional costs, such as taxes, overhead, and other administrative costs, should be deducted from the total potential profits or losses computed by the model.

2.5. Network example

We analyze a small illustration of 6 airports to evaluate the importance of the leg penalty, β, on the international gateway choice model. The example includes three airports in Europe, namely London-Heathrow

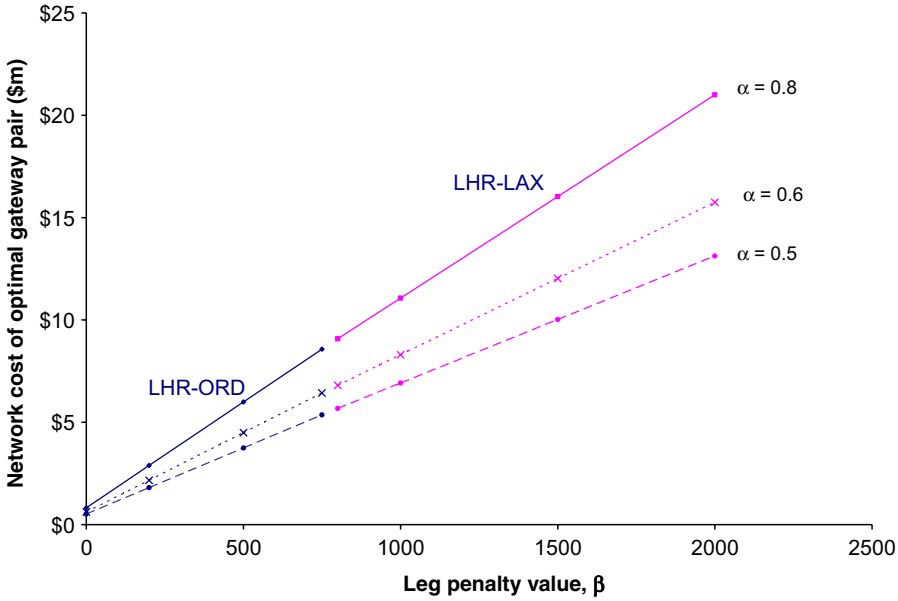

Fig. 2. Network costs and gateway choice as a function of α and β.

(LHR), Charles de Gaulle (CDG), and Frankfurt (FRA) and three airports in the United States, including Chicago-O'Hare (ORD), Los Angeles (LAX) and Newark (EWR).

In the example, we consider a potential merger between a US-based airline with potential gateways in Chicago (ORD) and Los Angeles (LAX) and a European-based airline with potential gateways in either London Heathrow (LHR) or Frankfurt (FRA). The choice of gateways and the network cost of the potential merger are obtained with formulation (2). The Boeing Corporation provided passenger demand data for a high-season day in the year 2001, presented in Appendix A in normalized form for reasons of confidentiality. The leg penalty, β, ranges in value from 0 (no penalty) up to a cost of \$2000 per additional leg traveled. For reference, the average cost per seat is \$41 between (i, j) within Europe, \$114 between (i, j) within the United States, and \$252 between i in Europe and j in the United States. The interhub discount factor, α, ranges in value from 0.5 to 0.8.

Fig. 2 shows the optimal pair of international gateways and the network costs for each combination of parameters α and β. In this example, the optimal hub choice is independent of α, the inter-hub discount rate. Furthermore, we find that β must be significantly higher than c_{ij} to change the choice of hubs. For $\beta \leqslant 750$, the optimal gateway pair is LHR and ORD. As β increases, the penalty for extra legs dominates and LAX replaces ORD as the optimal gateway in the United States. In this example, international demand through LAX exceeds demand through ORD, and for extreme values of β, the dependence on distance decreases and international demand becomes the primary factor in choosing a gateway. The results suggest that the number of legs required has a limited effect on the hub choice of an airline; therefore, the leg factor is considered on the demand rather than supply side, as described in the market share model in the next section (Eq. (4b)).

3. Game-theoretic competitive merger model

We develop a game-theoretic approach to merger and hub location decisions to evaluate HS networks under competition, which may include airlines working either on a specific, single continent or as global competitors. These decisions are modeled as a game played among multiple airlines, analyzing the most appropriate international gateways to develop, expand or remove in the newly merged hub-spoke network. The game can be extended to consider how such a merger would then affect the air transport market and whether or not it would lead to new collaborations between other players in the market over time.

The four steps of the game-theoretic competitive merger framework are shown in Fig. 3. In the first step, information on potential competitors and partners in the marketplace is gathered through an assessment of the current competitive nature of the industry. This information is used in Step 2 for network analysis of location-allocation decisions based on a p-hub cost-based formulation. In Step 3, market competition is modeled with a two-stage game: Stage 1 determines the partners for the merger and the resulting set of potential network configurations, and Stage 2 computes the airfares for the remaining airlines in the marketplace. Stage 1 represents the first stage in a Nash-type 2-stage game. Stage 2 evaluates airfares using an adapted profit-maximization p-hub median formulation that provides the payoffs for Stage 1 choices. The competitive model is thus a non-cooperative game defined by a set of players, each using a set of strategies to maximize his or her own profit function, which is dependent on the simultaneous actions of all players (Von Neumann and Morgenstern, 1943). This strategy set includes the decision to merge and the choice of international gateways to connect merging networks. The choice of gateways affects the costs and the market share of an airline. The profit or loss of an airline is compared among a variety of merger/alliance scenarios, including the possibility of no mergers/alliances. Finally, a search for the equilibrium solution is performed in Step 4.

Assume, for example, that we determine in Step 1 that there are four major contenders in a market and the networks of these airlines are analyzed in Step 2. The next move is to permit the airlines to compete, given their network choices, using airfares to attract market-share. The game is run with all four airlines operating independently, and then with all possible combinations of three airlines and two airlines. For each combination of merged airlines, the networks are integrated through a choice of international gateway. In this manner, we can examine the advantages and disadvantages of such alliances or mergers as compared to the base game of separate airlines. The final stage searches for potential equilibrium solutions among these choices, based on a contribution to fixed costs and profits of airline combinations before and after mergers.

Note that airlines are the key players in the game. Although passengers are not accounted for explicitly, airfares and route configurations (i.e., the number of legs a passenger must travel) influence the market share model. Airports are not considered in the model since their strategy set is rather unclear. Except in a few cases, such as London, airports are government-owned and the individual states and local governments set their own airport pricing policy. In addition, airport landing and passenger related charges are too low to affect the

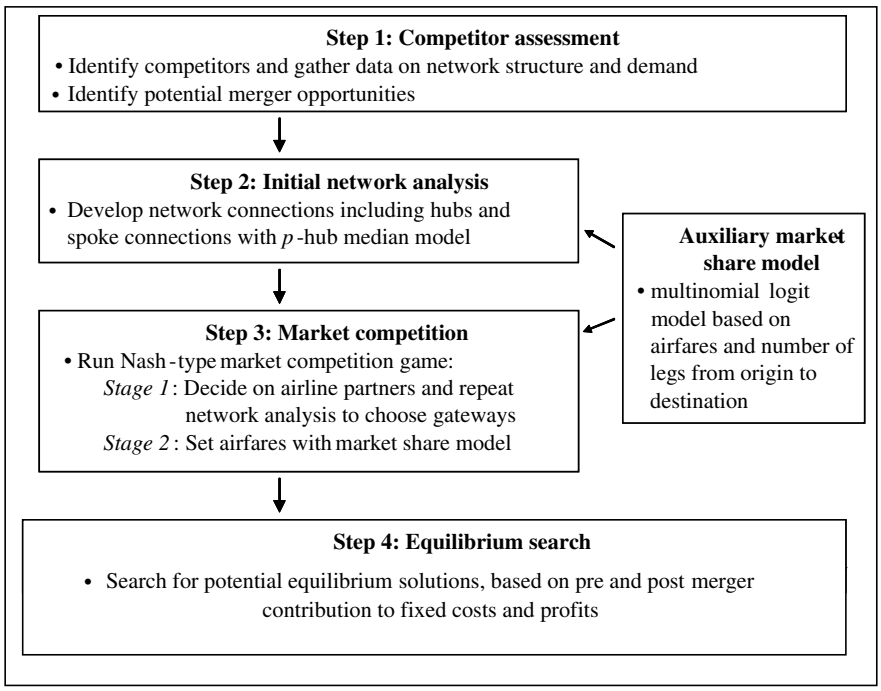

Fig. 3. Game-theoretic competitive merger framework.

airlines' network choice decision problem, as they generally account for approximately 12% of airline total costs (see Swan and Adler, 2006). While airport capacity is a significant factor, capacity is generally not a decision of the airport itself whether privatized or not, rather the decision is based on political and environmental considerations. Furthermore, the time lag between a decision to expand an airport's capacity and the construction are considerable and beyond the scope of this model.

Given explicit competition, sub-game perfect Nash equilibria of the non-cooperative game are sought by computing a payoff matrix. A Nash equilibrium can be defined as a strategy profile in which each player's choice solution is as good a response to the other airlines' choices as any other strategy available to that player (Kreps, 1990). In building a game, demand is allocated among competing airlines using a market share model. The following model computes the second stage airline payoffs:

Data

A	set of airlines
δ	weight in logit model setting importance of airfare in fare – leg trip trade-off
V	value of time in dollars per hour
L_{ija}	number of legs involved in trip from node $i \in N$ to node $j \in N$ with airline $a \in A$
ρ	reservation value, beyond which a passenger will choose an alternative mode or not to travel at all
$\widehat{Y}_{ira}$	1 if node $i \in N$ is connected to hub $r \in H$ on airline $a \in A$; 0 otherwise
$\widehat{X}_{ra}$	1 if node $r \in H$ is a regional hub on airline $a \in A$; 0 otherwise
$\widehat{Z}_{ra}$	1 if hub $r \in H$ is chosen as an international hub on airline $a \in A$; 0 otherwise

Decision variables

p_{ija}	price to travel from i to j via airline a
M_{ija}	market share from i to j for airline a (dependent on p_{ija})

$$\begin{aligned}\operatorname*{Max}_{p_{ija}} \sum_{t\in T}\sum_{i\in N^t}\Bigg(&\sum_{\substack{j\in N\\ i\neq j}} p_{ija}M_{ija}h_{ij} - \sum_{r\in H^t} c_{ir}\widehat{Y}_{ira}\sum_{\substack{j\in N^t\\ i\neq j}}(M_{ija}h_{ij}+M_{jia}h_{ij}) - \sum_{\substack{j\in N^t\\ i\neq j}}\sum_{r\in H^t}\sum_{\substack{s\in H^t\\ s\neq r}} \alpha c_{rs}M_{ija}h_{ij}\widehat{Y}_{ira}\widehat{Y}_{jsa}\\ &- \sum_{\substack{j\in N\setminus N^t\\ i\neq j}}\sum_{r\in H^t}\sum_{s\in H^t}\alpha c_{rs}(M_{ija}h_{ij}+M_{jia}h_{ji})\widehat{Y}_{ira}\widehat{Z}_{sa} - \sum_{\substack{j\in N\setminus N^t\\ i\neq j}}\sum_{r\in H^t}\sum_{s\in H\setminus H^t}\alpha c_{rs}M_{ija}h_{ij}\widehat{Z}_{ra}\widehat{Z}_{sa}\Bigg)\end{aligned} \tag{4a}$$

$$\text{where } M_{ija} = \frac{e^{-(\delta p_{ija}+2V(L_{ija}-1))}}{e^{-\rho}+\sum_{a'\in A}e^{-(\delta p_{ija'}+2V(L_{ija'}-1))}} \tag{4b}$$

The objective function (4a) evaluates the profitability of airline a at Stage 2 of the game, given a market share M_{ija} specified in (4b). We obtain Eq. (4a) by changing formulation (2) into profit maximization, hence introducing a revenue function and airfare variables. The leg penalty, β, was removed from the cost function and instead placed in the traveler's utility function, as described in Eq. (4b). A multinomial logit model is used in Eq. (4b) to compute airline market share, given a maximal level of demand (see Ben-Akiva and Lerman, 1985). The market share is based on airfare and the number of legs traveled as an initial illustration, which can be substantially extended relatively easily within this general framework should data be available. The leg expression translates the additional time and inconvenience required to travel indirectly into a monetary term. For each excess landing and take-off required to travel from airport i to airport j with airline a, the utility of a traveler decreases by two hours (an assumption as to the additional circuity time). The total additional time is then multiplied by a value of time parameter, V, to compute a disutility of indirectness. Multiple passenger types can be considered by varying values of V. Furthermore, δ reflects the weight on the airfares as compared to the leg expression and can also be adapted to consider multiple passenger types. The additional

expression in the denominator ensures that airlines do not overcharge by expressing the price elasticity of demand (Hong and Harker, 1992).

Eq. (4b) is a simple logit model and more extensive suggestions as to appropriate variables can be found in Alamdari and Black (1992). Note that the model suggested here may be easily adapted to other market share models. The model is a simplification for illustrative purposes and does not currently contain such information as the great circle distance (although it is considered indirectly, as distance affects the cost of producing a seat). An airline whose prices do not cover costs will not be profitable and is assumed to go bankrupt.

As shown in Fig. 3, step 3 sets prices once the partners and networks are chosen. The first order conditions of Eq. (4a) are presented in the following equations. Let $\hat{c}_{ija}$ denote the cost of serving market (i, j) for airline a and will be the sum of the costs of all the relevant legs for that airline. For the two airline case or within-continent analysis, for each market (i,j), Eq. (5a) is applied to each airline a serving that market.

$$(1 - M_{ija})(p_{ija} - \hat{c}_{ija}) = \frac{1}{\delta} \tag{5a}$$

For the three or four airline case in which the origin and destination paths traverse continents, for each market (i, j), Eq. (5b) is applied to each airline a serving that market.

$$(p_{ija} - \hat{c}_{ija}) - \frac{1}{\delta} = \sum_{a' \in A} (p_{ija'} - \hat{c}_{ija'}) M_{ija'} \tag{5b}$$

Eqs. (5) reflect the fact that (i) as the price tends to the cost parameter, the left hand side tends to zero and (ii) as the price increases, the left hand side increases, since the market share will tend to zero. Thus, a balance is found such that the left hand side equals a constant value $1/\delta$. The constant represents the reciprocal of the weight in the logit model balancing the trade-off between the airfare and the trip length (as represented by the number of legs involved).

The non-linear payoff function (4a) can be solved relatively easily using standardized conjugate gradient or tangential Newtonian algorithms. The mathematical program meets the requirements specified in Caplin and Nalebuff (1991) to ensure a unique, price, Bertrand-Nash equilibrium through dominating strategies. The mathematical requirements include (1) preferences linear in prices and number of legs traveled; i.e., travelers choose their alternative based on a weighted sum of benefits and (2) the market share logit model is log concave, based on individual Weibull distributions. Subsequently, as described in Step 4 of Fig. 3, the most profitable merger is compared against the base case of no merger or merging with an alternative airline in order to assess the equilibria of the first stage game. However, the existence or uniqueness of the equilibrium of the entire game cannot be guaranteed due to the integrality conditions of the location variables.

4. Application of the competitive merger model

In this section, the framework described in Section 3 is applied to the example from Section 2. We present results and analysis from this test case for potential mergers in Section 4.2, a sensitivity analysis over the inter-hub discount factor in Section 4.3 and an analysis of potential alliances in Section 4.4.

4.1. Description of application

The game-theoretic approach is applied to a set of possible complimentary mergers among international carriers. Two North American airlines, each with two hubs in the US (Airline 1: Chicago and Los Angeles and Airline 2: Chicago and Newark), are separately considering merging with one of two potential European partners. Each EU carrier has a single hub in Europe, namely London Heathrow or Frankfurt. There are six airports in the illustration: Chicago O'Hare, Los Angeles, Newark, London Heathrow, Charles de Gaulle Paris and Frankfurt, as described in Appendix A. If both American airlines and European airlines choose to merge, the resultant game consists of two players. If one American and one European airline merge, there will be three players in the marketplace, one on each continent and one international airline. The base case, under which no airlines merge, consists of four players each with two transatlantic flights.

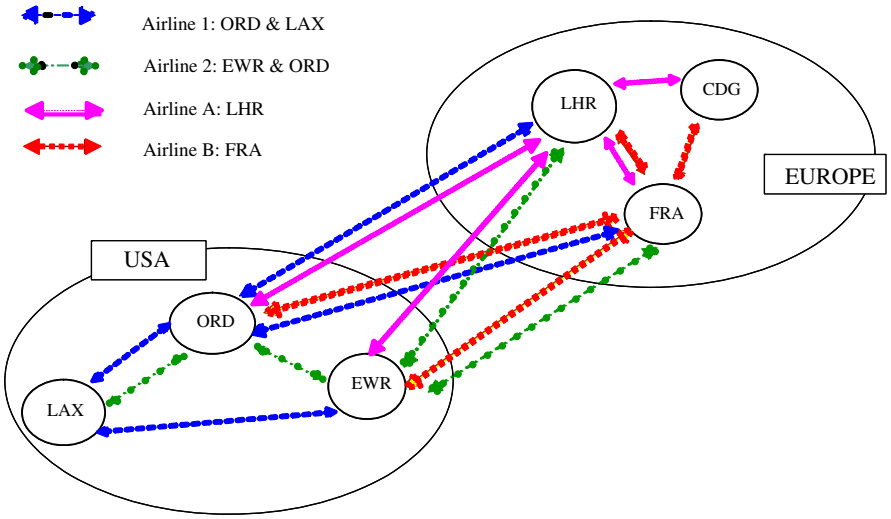

Fig. 4. Base case with no mergers.

Fig. 4 depicts possible network structures under a four-player game. In this example, airline 1 uses ORD as its international hub and LAX as a regional hub while airline 2 uses EWR as its international gateway and ORD as the regional hub. Both European airlines use their respective, single hubs as joint international gateways and regional hubs, leaving CDG as the only non-hub airport.

4.2. Discussion of results

The outcome of the base run, in which all four airlines develop separate networks, is presented in Table 1. In this example, only the US carriers have a choice of international gateways, since each European carrier has simply one hub.

The payoffs in each cell represent the contribution to fixed costs and taxes on a per day basis (demand is in passengers per day) in thousands of dollars per airline. The first payoff in each cell refers to airline 1 and the second to airline 2 in the US, with the third and fourth payoffs reflecting payoffs for airlines A and B in Europe respectively. According to Table 1, it is always worthwhile for airline 1 to choose ORD over LAX ($1058 > 500$ and $389 > 152$) and for airline 2 to choose ORD over EWR ($1245 > 690$ and $201 > 102$), hence both have strongly dominating strategies leading to a single, sub-game perfect equilibrium, namely (ORD, ORD), the highlighted cell. Note that these choices do not significantly affect the profitability of European airlines A and B.

Next, we consider two fully merged airlines, under the assumption that no airline can merge with more than one airline on another continent. The payoffs are split so that each individual airline can decide whether to merge. It is assumed that a merged airline's profit is shared out according to the unmerged capabilities of each company and the excess profit or loss from the merger in split equally, as shown in Table 2, where the merger between airlines 1 and A leads to a profit potential computed at $1320 thousand dollars.

Table 1
Four-airline sub-game with different international gateways: base case

	Airline 2's gateway choice							
	ORD				EWR			
Airline 1's gateway choice								
ORD	1058	1245	331	110	389	690	331	110
LAX	500	201	332	110	152	102	331	110

Table 2
Payoff computation for merger between airlines 1 and A

	Profit in $000s		
	Airline 1	Airline A	Total
Profit prior to merger	1058	331	1389
Profit after merger			1320
Split excess profits/loss from merger equally	−34.5	−34.5	−69
Total profit after merger	1023.5	296.5	1320

The payoff share computation may affect the outcome of the equilibria, hence alternative share rules can also be tested for robustness of outcome. However, the share rule is artificial as subsequent to the merger, only one airline will remain.

Table 3 presents the outcomes of the two-airline merged cases. Each cell presents the contribution to fixed costs and profits of two airlines in thousands of dollars, depending on the merger and international gateway choices. The payoffs for airline 1 with its partner appears first, followed by those of airline 2 with its partner. The results show that once again dominating strategies prevail, leading to a single, sub-game perfect equilibrium, as proven in Caplin and Nalebuff (1991). The choice of international gateway has changed from the base case solution (ORD, ORD) to (ORD, EWR) in both two-airline cases. For example, in the airline 1A-airline 2B game, airline 1A will always prefer ORD over LAX (1691 > 1658 and 1320 > 1060) irrespective of airline 2B's choices and airline 2B will always prefer EWR over ORD (1532 > 1266 and 1115 > 1061) irrespective of airline 1A's choices.

Fig. 5 presents the results of all potential sub-game equilibria, thus permitting a search for an overall equilibria at stage 1 of the game. From Fig. 5, it is clear that there is no unique outcome to the entire game, instead there are three potential equilibria outcomes. The 4-airline case is not an equilibrium according to the notion of iteratively dominated strategies and neither are the 2-airline complete parallel merger cases. Several conclusions can be drawn from this simple illustration:

1. Mergers are preferable for two of the four airlines, but it is unclear without introducing further information or rules for the game which specific three airline carrier market will emerge. Players 1 and B prefer the (1A, 2, B) outcome and players 2 and A prefer the (1, 2A, B) solution outcome. Therefore, one could argue that the latter solution is more likely as 2 and A can choose to merge and it is not in B's interest to merge with 1.
2. The choice of international gateway changes when three airlines exist as opposed to four. In this example, both US airlines choose ORD as their optimal international gateway in the 4-airline base case; however, under the 3-airline merged cases, the airlines always choose different hub locations (see Fig. 5).
3. The average airfares computed in the second stage drop when moving from four airlines to three. Thus, such mergers could be in the interest of travelers, although they lose some direct flight alternatives. The summed payoffs of all companies are slightly higher in the 3-merger case because the transatlantic costs drop for the merged airline (all intercontinental flights become cheaper since the merged airline flies between two of its own hubs with the α inter-hub discount).

Table 3
Fully merged game with two airlines remaining in marketplace

	Airline 2A's gateway choice				Airline 2B's gateway choice			
	ORD		EWR		ORD		EWR	
Airline 1A's gateway choice								
ORD					1691	1266	1320	1532
LAX					1658	1061	1060	1115
Airline 1B's gateway choice								
ORD	1000	1797	620	2042				
LAX	1104	1742	508	1793				

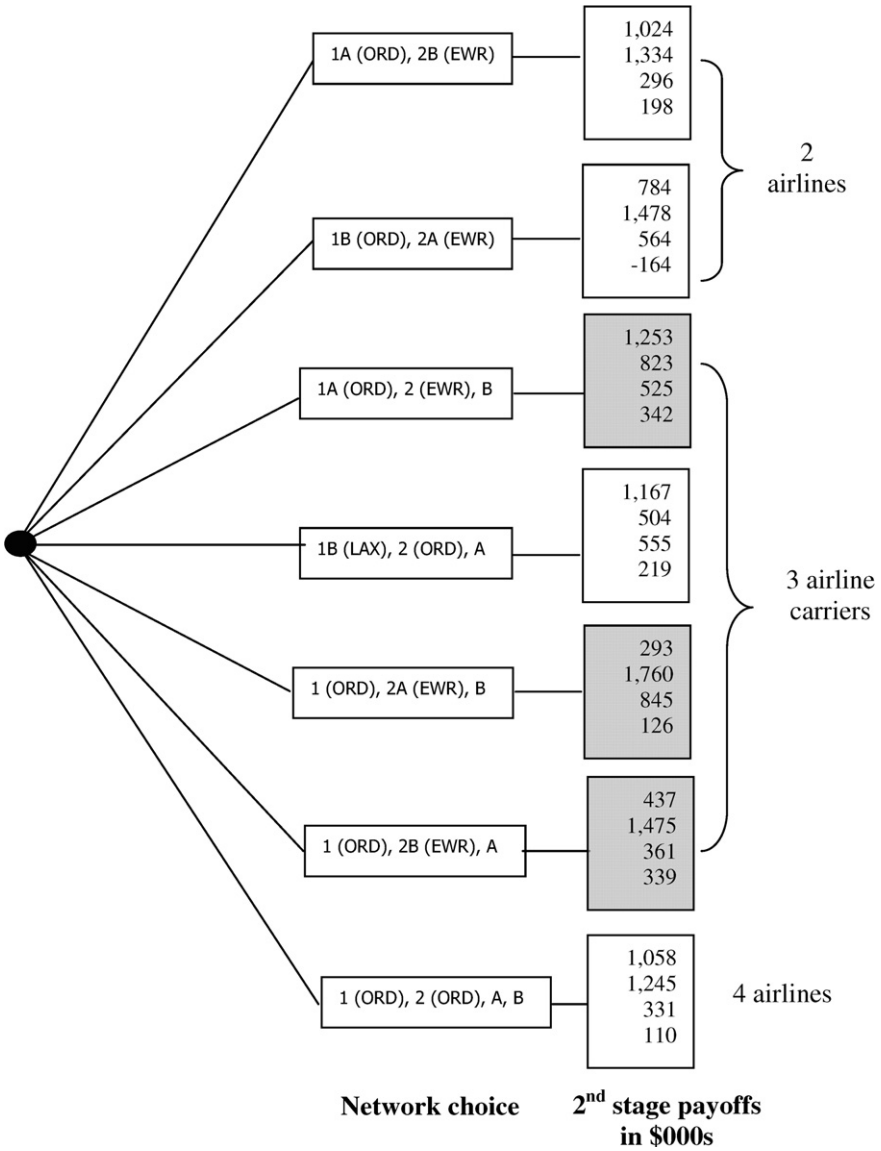

Fig. 5. Sub-game equilibria of merger illustration.

Furthermore, the ratio of size has changed from two large US based companies and two small European ones to one large merged company and two small companies based in the US and Europe. It would be perfectly reasonable for governments to compute the social welfare of each of the two solutions and evaluate which is preferable from their perspective. This result is consistent with Brueckner and Spiller (1991) who argue that competition may imply a reduction in total social surplus.

4.3. Sensitivity analysis over different values of the inter-hub discount factor

The previous analyses are conducted with $\alpha = 0.75$. Table 4 presents the results of the 4-airline game with hub-to-hub discount factors varying from 0.5 to 1. The sensitivity analyses show that the results are robust and the equilibrium outcome does not change. This is true for all scenarios. The (ORD, ORD) outcome is strongly preferable to the other network configurations, with the (LAX, EWR) outcome forcing the US

Table 4
Results of sensitivity analysis for hub-to-hub cost discount factor

	Airline 2's gateway choice							
	ORD				EWR			
For α = 1.0								
Airline 1's gateway choice								
ORD	983	1307	331	110	258	726	332	110
LAX	467	208	332	110	30	33	332	110
For α = 0.75								
Airline 1's gateway choice								
ORD	1058	1245	331	110	389	690	331	110
LAX	500	201	332	110	152	102	331	110
For α = 0.5								
Airline 1's gateway choice								
ORD	1134	1183	331	110	505	656	331	110
LAX	556	176	343	114	265	173	331	110

airlines' payoffs to almost zero under the assumption of no hub-discounts. Further, there is little change in the profitability of European airlines due to changes in α because they each have a single hub.

4.4. Analysis of strategic alliances

In this section, model (4) is modified to consider the possibility of strategic alliances. First, we introduce two hub discount factors: let α_o define the hub discount factor between hubs owned by the airline and α_l define the hub discount factor between the two allied airlines. We assume that $\alpha_o = 0.75$ is smaller than $\alpha_l = 0.85$; i.e., the between-hub discount factor is greater within a company than across two allied airlines. Second, we split the single airfare received from a passenger between the two airlines depending on the ratio of costs, which are based on distance and aircraft size. In reality, such agreements between companies are complicated contracts based not only on costs and stage length, but also on information external to this analysis, such as market power and desire to reach agreement.

Fig. 6 presents the results from the previous example given strategic alliances rather than mergers. The 4-airline base case is the same as that of the merger example, since the discount factor is irrelevant in this no-alliance, no-merger case. Under the strategic alliance test case, two potential equilibria outcomes are identified, namely (1B (LAX), 2 (ORD), A) and (1 (ORD), 2B (EWR), A). The 4-airline case can be removed under the notion of iteratively dominated strategies. When looking at the two potential solutions, both US based airlines prefer to ally with B, and B prefers 2 ($196 > 148$). Hence, the alliance between 2 and B is more likely. This solution outcome is different from that of the merger case study, where it is more likely that airlines 2 and A will merge, but similar in that the 3-airline case is the more likely solution outcome. These results are also in line with the managerial implications drawn in Park et al. (2001) who find that partner airlines generally increase profits and this can have an adverse effect on non-partner airlines. In both equilibria outcomes, the US-based carrier that fails to merge or ally with a European airline drops in size dramatically.

5. Summary and future directions

This paper discusses the effects of competition on airlines' choices of international gateways when considering potential mergers and alliances. This research develops a basic framework to assess the profitability of a specific network given the level of competition. The strategic model can be used by airlines to analyze potential alliances or mergers in an objective manner, and by regulatory authorities to evaluate anti-trust issues. The work departs from existing economic analyses by providing a framework to assess specific, potential alliances and their effect on social welfare and air transportation in general.

A six-node example illustrates the potential of the framework to analyze the air transportation market. The results are somewhat surprising in that the equilibria outcomes most likely to occur are those whereby one US

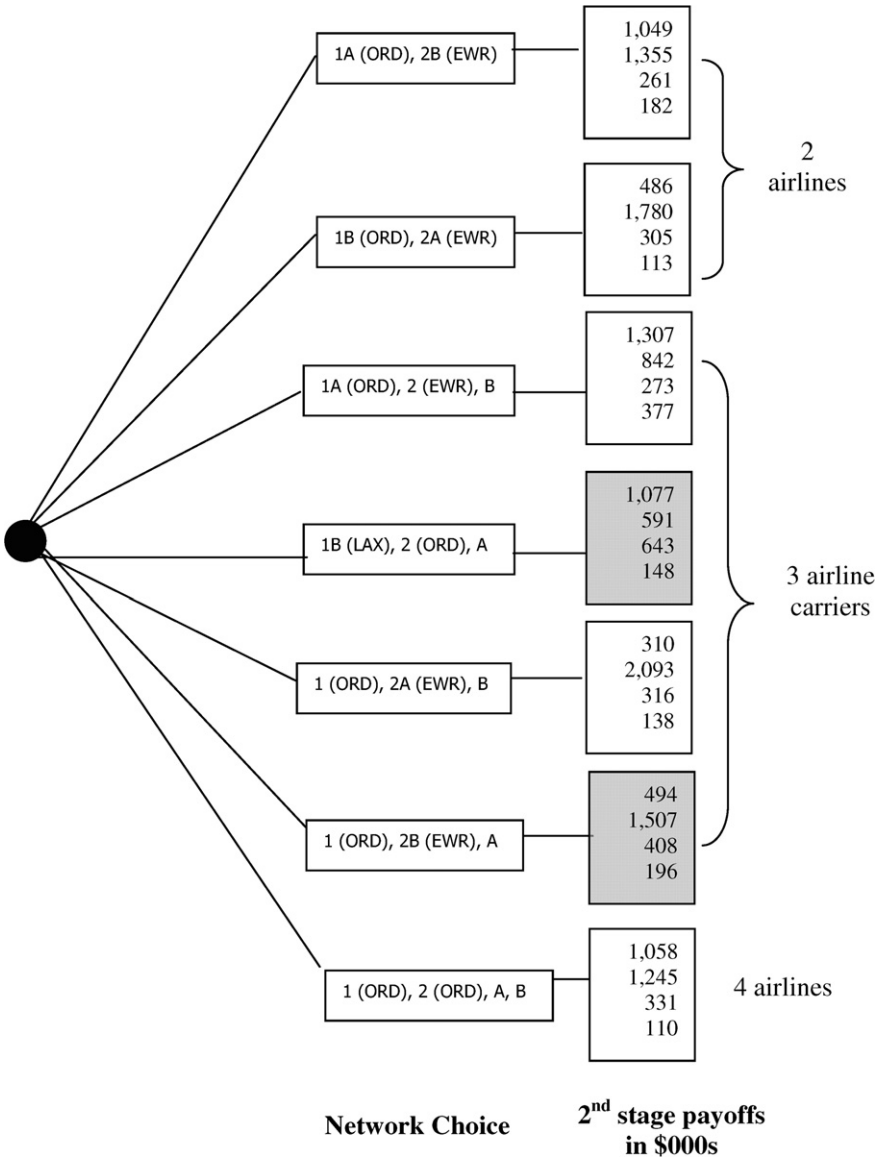

Fig. 6. Results of strategic alliances for $\alpha_o = 0.75$ and $\alpha_l = 0.85$.

carrier merges with one European carrier and the remaining two airlines choose not to merge. The equilibria outcomes of both strategic alliances and mergers have a positive effect on both of the European firms and the US-based firm that allies or merges with a partner but a strongly detrimental effect on the US airline that fails to find a partner.

While the framework is an extremely simplified version of reality, it is an important continuation in analyzing the effects of potential alliances and mergers. We envision future work both on the algorithmic front and in the scope of the individual models. Algorithms may be extended to consider location, allocation and airfares simultaneously. Further, the model could be expanded to include multiple allocations and direct connections that would bypass hubs where demand could support such a path. The market share model could be expanded to include frequency and aircraft sizes as decision variables, possibly as a third step in the game. It would also be interesting to analyze the game over time, in order to understand the evolution of the air transport mode. This would require a more in-depth description of the players' strategy sets and some rules

of behavior. Finally, in empirical terms, it would be of great interest to analyze larger networks of at least 200 nodes over all five continents, enabling a greater understanding of the global nature of air transportation.

Acknowledgement

The authors would like to thank Mark Daskin and Tae Hoon Oum for very helpful comments on earlier versions of this paper. Nicole Adler would like to thank the Israel Science Foundation (grant number 1174/04) for their generous support.

Appendix A. Great circle distance and normalized demand between airports in illustration

	LHR	CDG	FRA	ORD	LAX	EWR
GCD (km)						
LHR	0					
CDG	346	0				
FRA	870	610	0			
ORD	8781	9018	9625	0		
LAX	11,929	12,155	12,765	3173	0	
EWR	7463	7691	8300	1349	4467	0
Normalized daily passenger demand						
LHR	0					
CDG	118	0				
FRA	100	59	0			
ORD	69	30	29	0		
LAX	93	43	31	148	0	
EWR	54	41	21	144	154	0

Where the airports included are as follows:
LHR London Heathrow
CDG Charles de Gaulle, Paris
FRA Frankfurt
ORD O'Hare, Chicago
LAX Los Angeles
EWR Newark

References

Adler, N., 2001. Competition in a deregulated air transportation market. European Journal of Operational Research 129, 108–116.
Adler, N., 2005. The effect of competition on the choice of an optimal network in a liberalized aviation market with an application to Western Europe. Transportation Science 39, 58–72.
Adler, N., Berechman, J., 2001. Evaluating optimal multi-hub networks in a deregulated aviation market with an application to Western Europe. Transportation Research Part A 35, 1–18.
Alamdari, F.E., Black, I.G., 1992. Passengers' choice of airline under competition: The use of the Logit model. Transport Reviews 12 (2), 153–170.
Barla, P., Constantatos, C., 2000. Airline network structure under demand uncertainty. Transportation Research Part E 36, 173–180.
Ben-Akiva, M., Lerman, S.R., 1985. Discrete Choice Analysis: Theory and Application to Travel Demand. MIT Press, Mass.
Bhaumik, P.K., 2002. Regulating the domestic air travel in India: An umpire's game. Omega 30, 33–44.
Brueckner, J.K., Spiller, P.T., 1991. Competition and mergers in airline networks. International Journal of Industrial Organization 9, 323–342.
Brueckner, J.K., Spiller, P.T., 1994. Economies of traffic density in the deregulated airline industry. Journal of Law and Economics 37, 379–415.
Brueckner, J.K., Zhang, Y., 2001. A model of scheduling in airline networks: How a hub-and-spoke system affects flight frequency, fares and welfare. Journal of Transport Economics and Policy 35, 195–222.

Bryan, D.L., O'Kelly, M.E., 1999. Hub-and-spoke networks in air transportation: An analytical review. Journal of Regional Science 39, 275–295.

Button, K., 2002. Debunking some common myths about airport hubs. Journal of Air Transport Management 8, 177–188.

Campbell, J.F., 1994. A survey of hub location. Studies in Locational Analysis 6, 31–49.

Campbell, J.F., Ernst, A.T., Krishnamoorthy, M., 2002. Hub location problems. In: Drezner, Z., Hamacher, H. (Eds.), Facility Location: Application and Theory. Springer-Verlag, Heidelberg.

Caplin, A., Nalebuff, B., 1991. Aggregation and imperfect competition: On the existence of equilibrium. Econometrica 59, 25–29.

Caves, D.W., Christensen, L.R., Tretheway, M.W., 1984. Economics of density versus economies of scale: Why trunk and local service airline costs differ. Rand Journal of Economics 15, 471–489.

Chang, Y.-C., Williams, G., 2002. European major airlines' strategic reactions to the Third Package. Transport Policy 9, 129–142.

Dobson, G., Lederer, P.J., 1993. Airline scheduling and routing in a hub-and-spoke system. Transportation Science 27, 281–297.

Ebery, J., 2001. Solving large single allocation p-hub problems with two or three hubs. European Journal of Operational Research 128, 447–458.

Ernst, A.T., Krishnamoorthy, M., 1998. Shortest-path based lower bounding methods for p-hub median problems. INFORMS Journal on Computing 10, 149–162.

Fan, T., Vigeant-Langlois, L., Geissler, C., Bosler, B., Wilmking, J., 2001. Evolution of global airline strategic alliance and consolidation in the twenty-first century. Journal of Air Transport Management 7, 349–360.

Hong, S., Harker, P.T., 1992. Air traffic network equilibrium: Toward frequency, price and slot priority analysis. Transportation Research Part B 26 (4), 307–323.

Kreps, D.M., 1990. A Course in Microeconomic Theory. Princeton University Press, Princeton.

Lederer, P.J., 1993. A competitive network design problem with pricing. Transportation Science 27, 25–38.

Lederer, P.J., Nambimadom, R.S., 1998. Airline network design. Operations Research 46, 785–804.

Marianov, V., Serra, D., ReVelle, C., 1999. Location of hubs in a competitive environment. European Journal of Operational Research 114, 363–371.

McShan, W.S., Windle, R., 1989. The implications of hub-and-spoke routing for airline costs and competitiveness. Transportation Research Part E 25, 209–230.

Morrison, S., Winston, C., 1986. The Economic Effects of Airline Deregulation. The Brookings Institute, Washington D.C.

Nero, G., 1999. A note on the competitive advantage of large hub-and-spoke networks. Transportation Research Part E 35, 225–239.

O'Kelly, M., 1987. A quadratic integer program for the location of interacting hub facilities. European Journal of Operational Research 32, 393–404.

Oum, T.H., Park, J.-H., Zhang, A., 2000. Globalization and Strategic Alliances: The Case of the Airline Industry. Pergamon Press, Oxford.

Park, J.-H., Zhang, A., Zhang, Y., 2001. Analytical models of international alliances in the airline industry. Transportation Research Part B 35, 865–886.

Pels, E., Nijkamp, P., Rietveld, P., 2000. A note on the optimality of airline networks. Economics Letters 69, 429–434.

Skorin-Kapov, D., Skorin-Kapov, J., 1994. On tabu search for the location of interacting hub facilities. European Journal of Operational Research 73, 502–509.

Swan, W., Adler, N., 2006. Aircraft trip cost parameters: A function of stage length and seat capacity. Transportation Research Part E 42, 105–115.

Von Neumann, J., Morgenstern, O., 1943. Theory of Games and Economic Behavior. Princeton University Press, Princeton.